YKK AP America Inc.

35H Medium Stile Impact Resistant Door - Hurricane Storefront System

8" BOTTOM RAIL W/ (AIR & WATER)

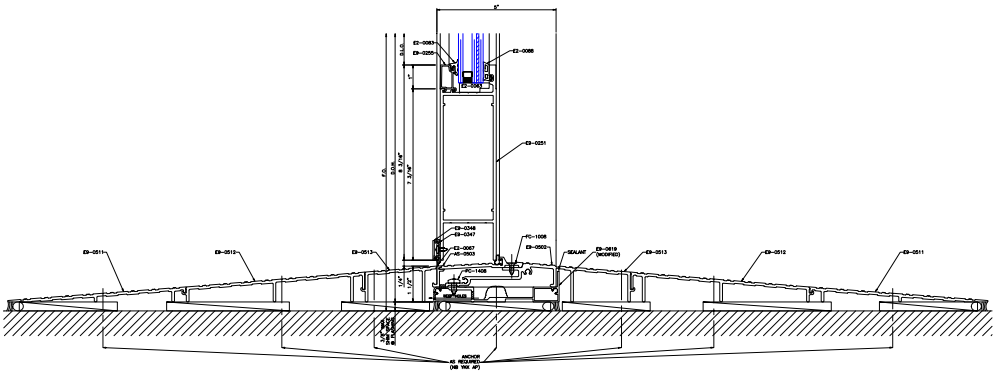

Scale: 25%

Current as of: 04/09/2024