YKK AP America Inc.

YCW 750 XT IG - Thermally Broken Inside Glazed Curtain Wall System
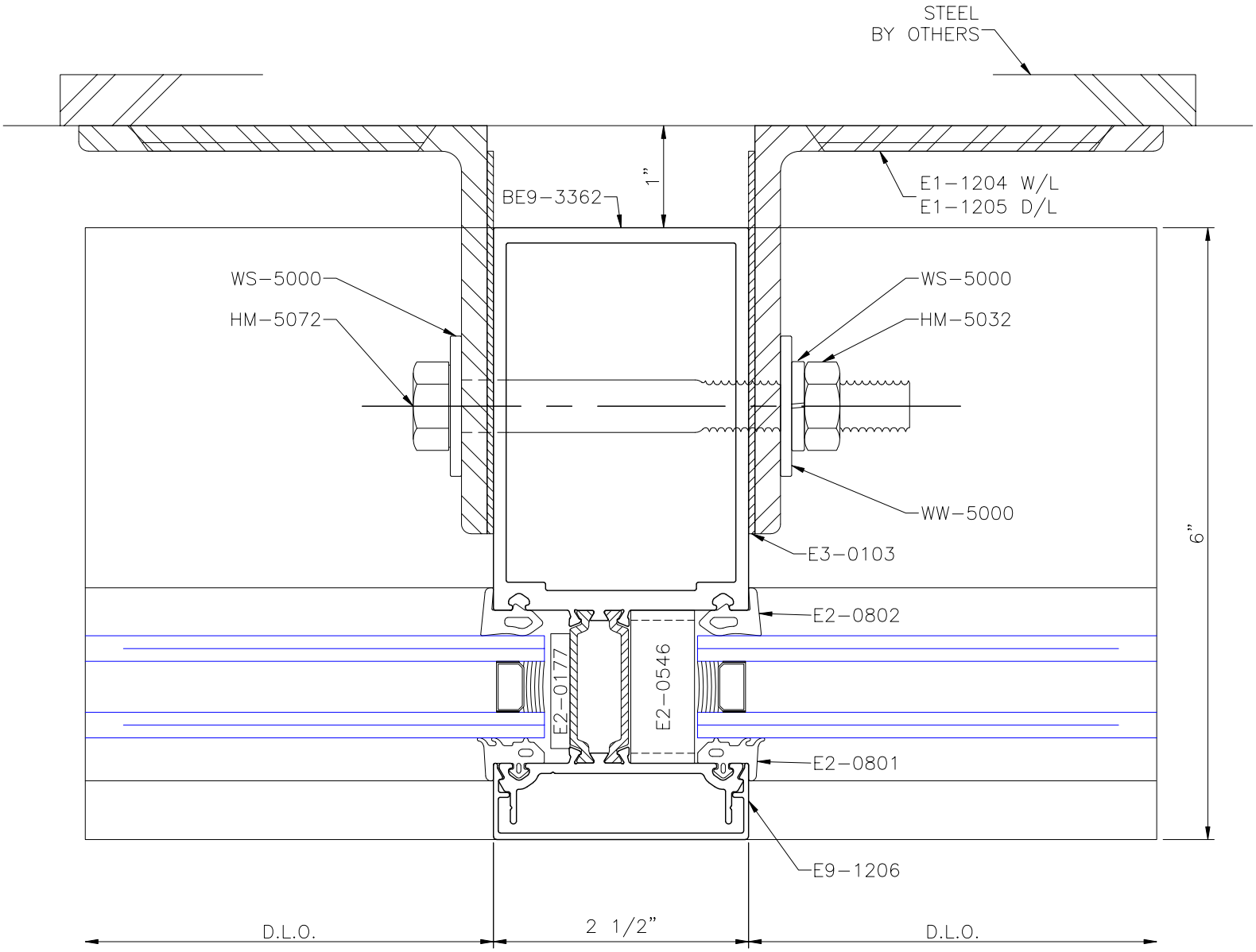
WIND/DEAD LOAD ANCHOR @ MULL (SNAP ON COVER)