YKK AP America Inc.

YCW 750 XT IG - Thermally Broken Inside Glazed Curtain Wall System
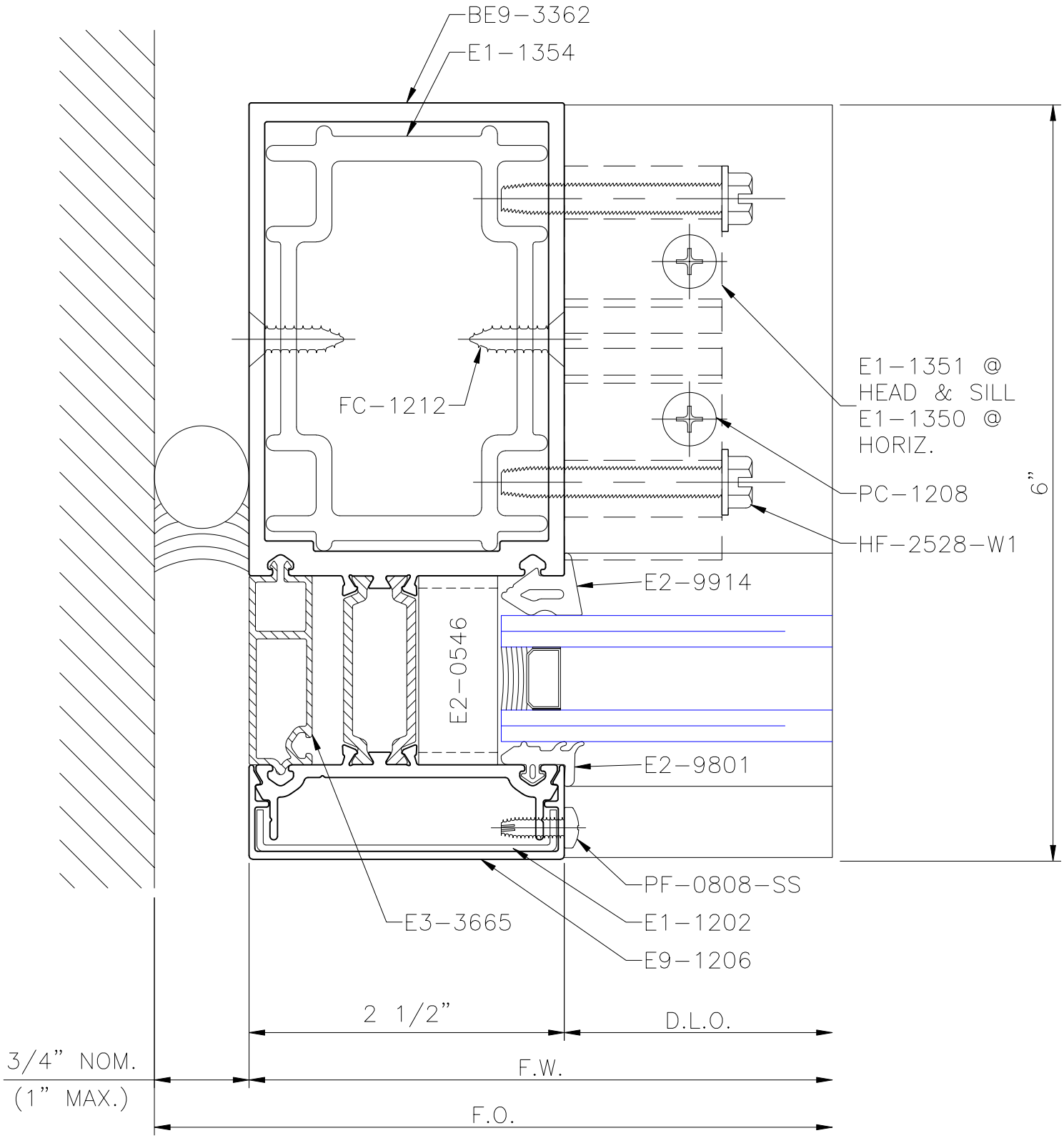
JAMB SPLICE SLEEVE DETAIL (SNAP ON COVER)