YKK AP America Inc.

YHS 50 FI - Hurricane Storefront System
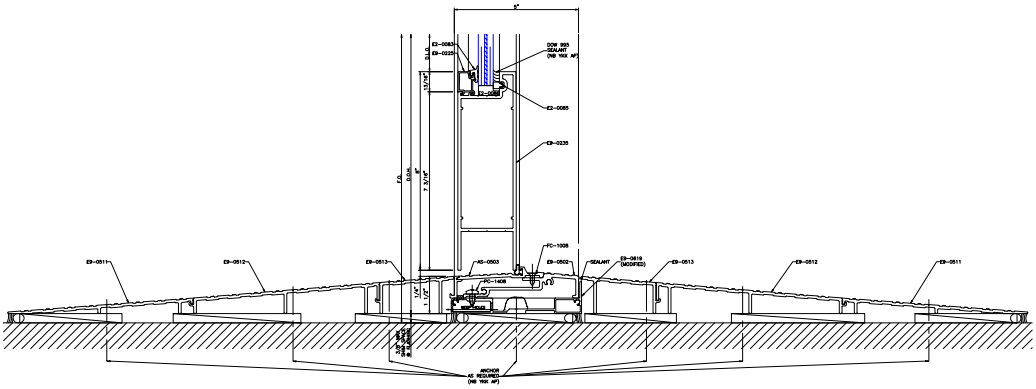
8" AIR/WATER BOTTOM DOOR RAIL