YKK AP America Inc.

YOW 350 TU - Window System
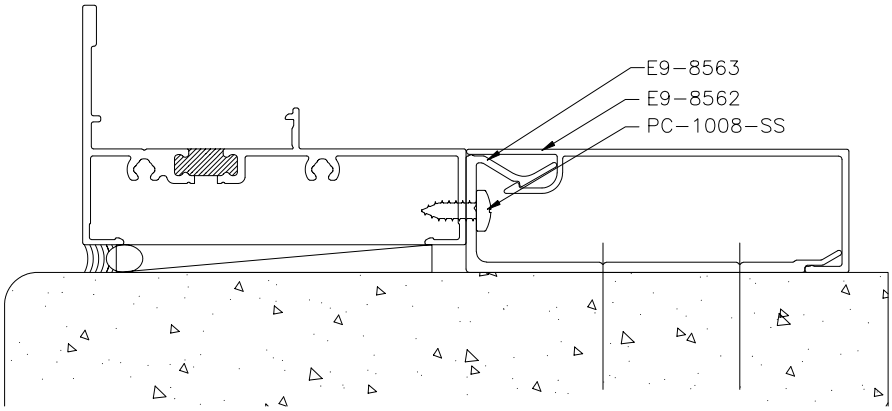
3-1/2" CLIP & COVER