YKK AP America Inc.

YOW 350 TU - Window System
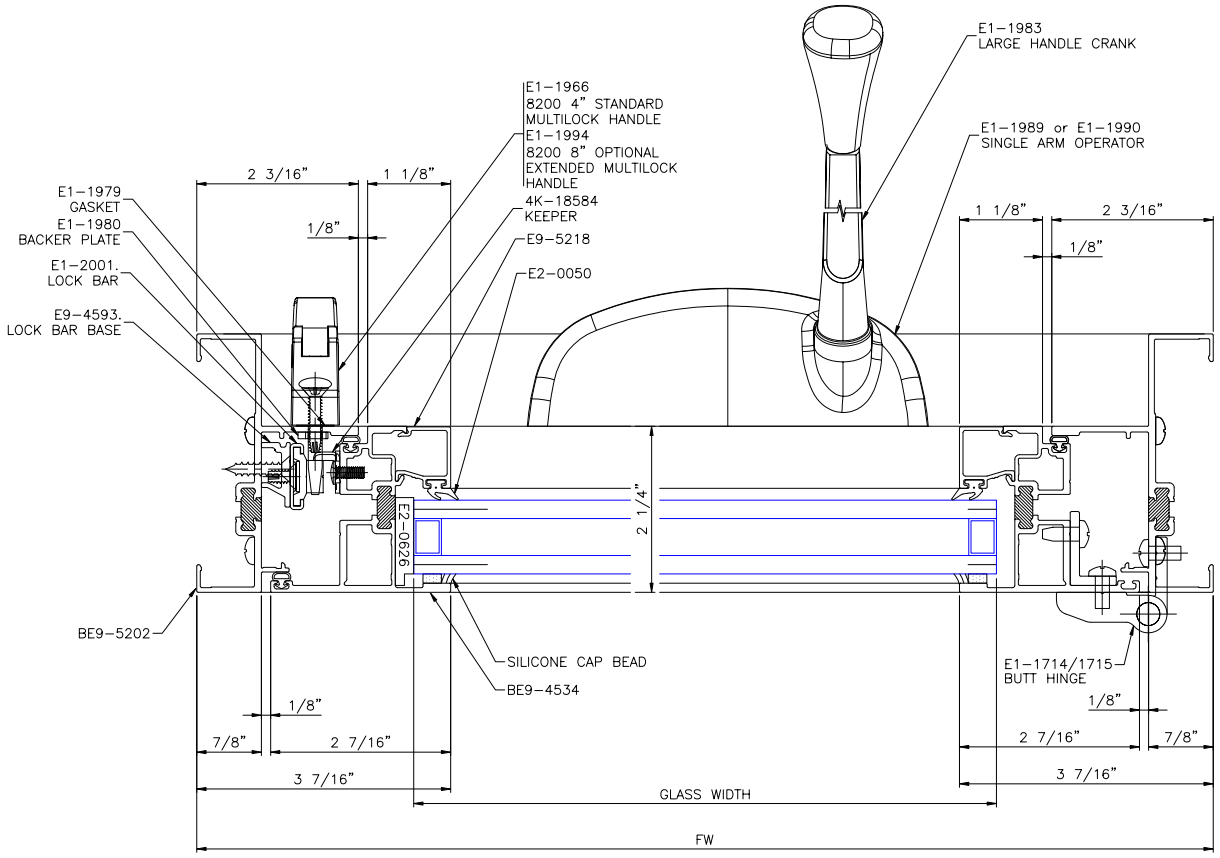
ROTARY OPERATOR WITH LOCK HANDLE